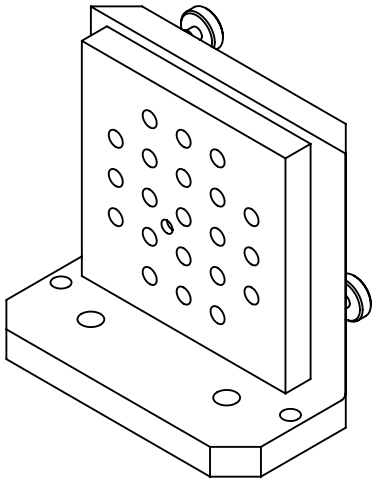

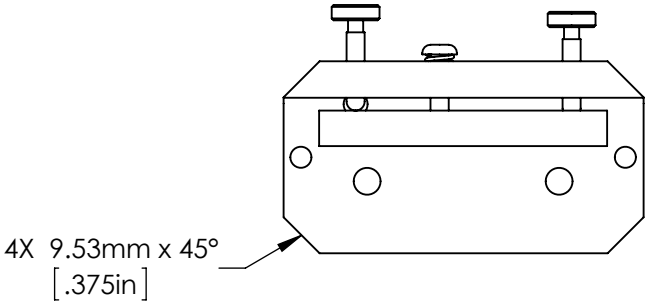


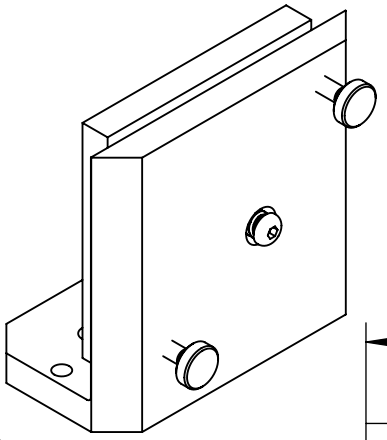

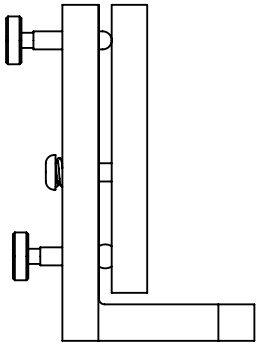

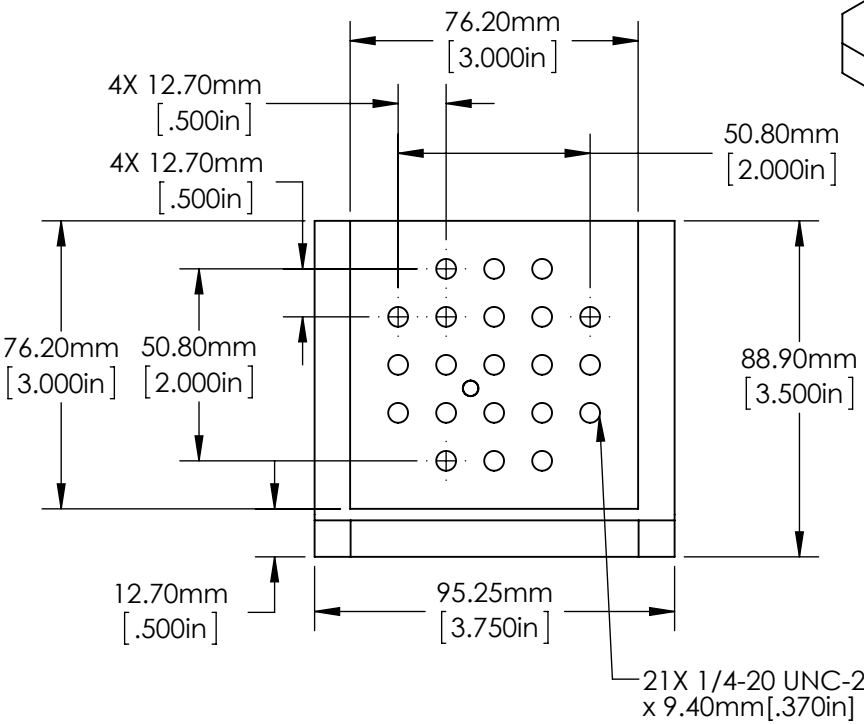


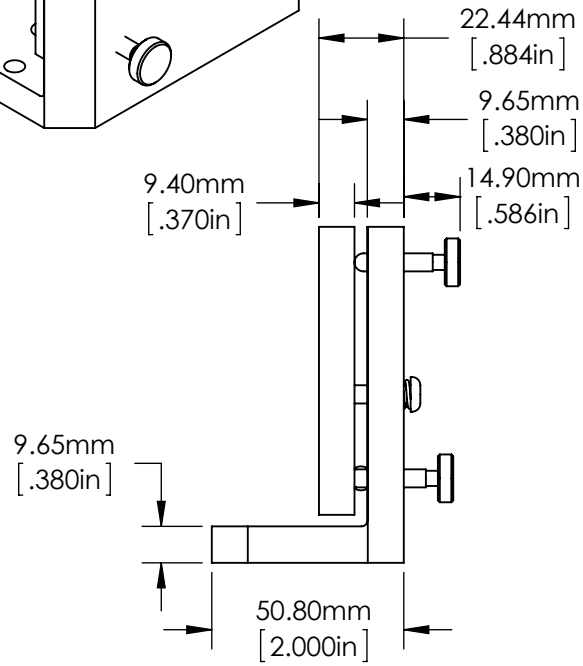


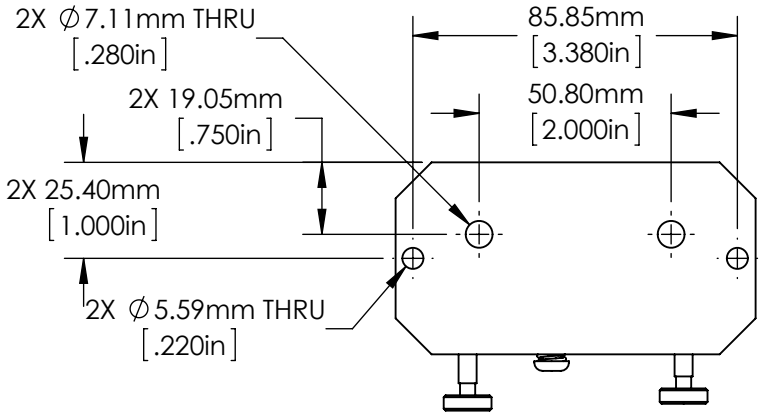


SPECIFICATIONS SUBJECT TO CHANGE WITHOUT NOTICE
DIMENSIONS ARE FOR REFERENCE ONLY
DIMENSIONS ARE IN mm [INCHES]

Edmund Optics®

| | | | | |
|---|---|---|---|---|
| TITLE | 3.0" Medium Mirror Mount | | | |
| DWG NO | 36481 | SHEET 1 OF 1 | REV | 000 |