NOTES:
1. MATERIAL: STAINLESS STEEL AND BLACK ANODIZED ALUMINUM
2. MAX TRAVEL DISTANCE: 1in
3. RoHS: EXEMPT

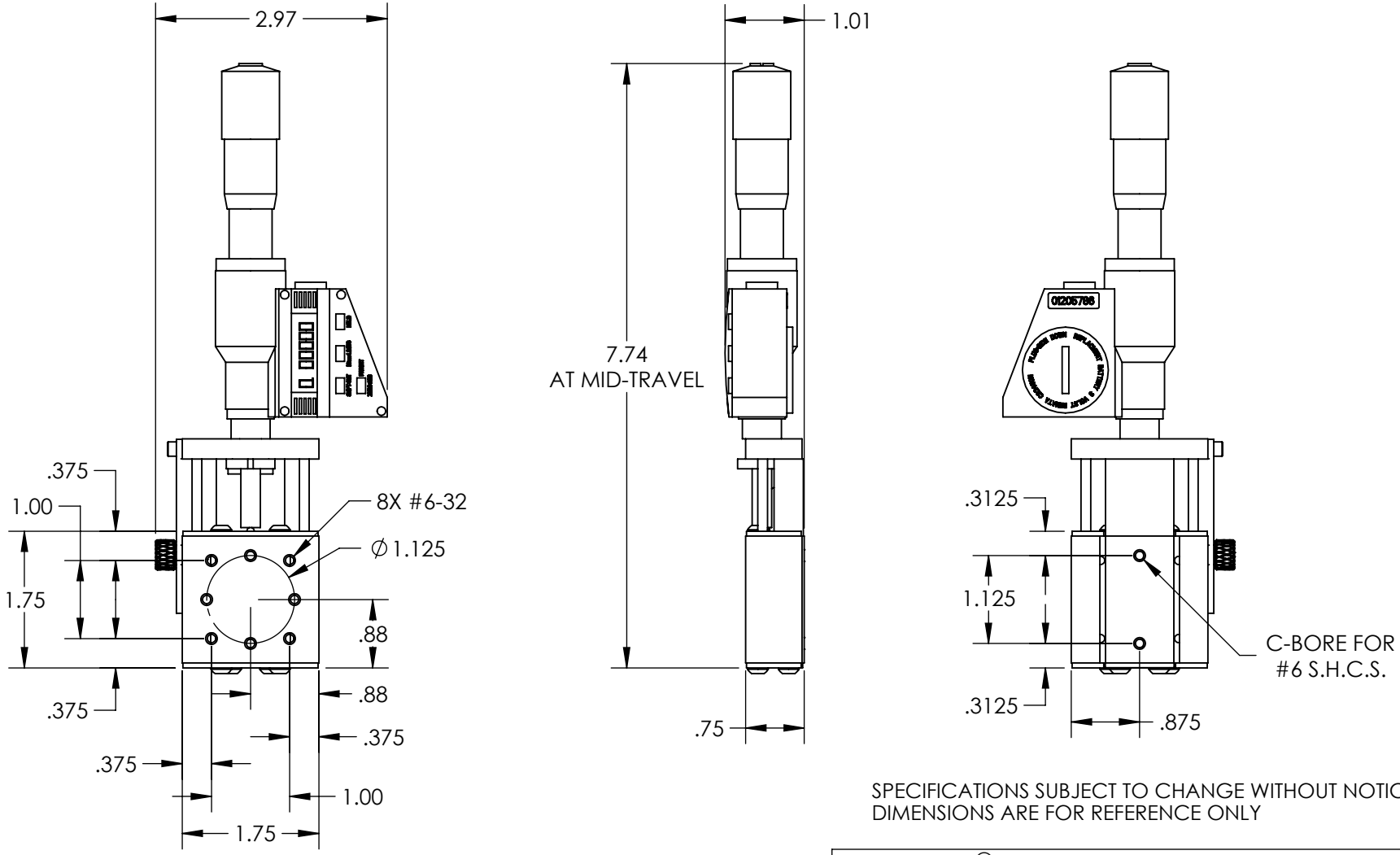

SPECIFICATIONS SUBJECT TO CHANGE WITHOUT NOTICE
DIMENSIONS ARE FOR REFERENCE ONLY

FOR INFORMATION ONLY:
DO NOT MANUFACTURE PARTS TO THIS DRAWING

Edmund Optics®

THIRD ANGLE PROJECTION		TITLE	1" TRAVEL, ENG MICROMETER, SOLID TOP 1.75" STAGE	
ALL DIMS IN	in	DWG NO	53856	SHEET 1 OF 1