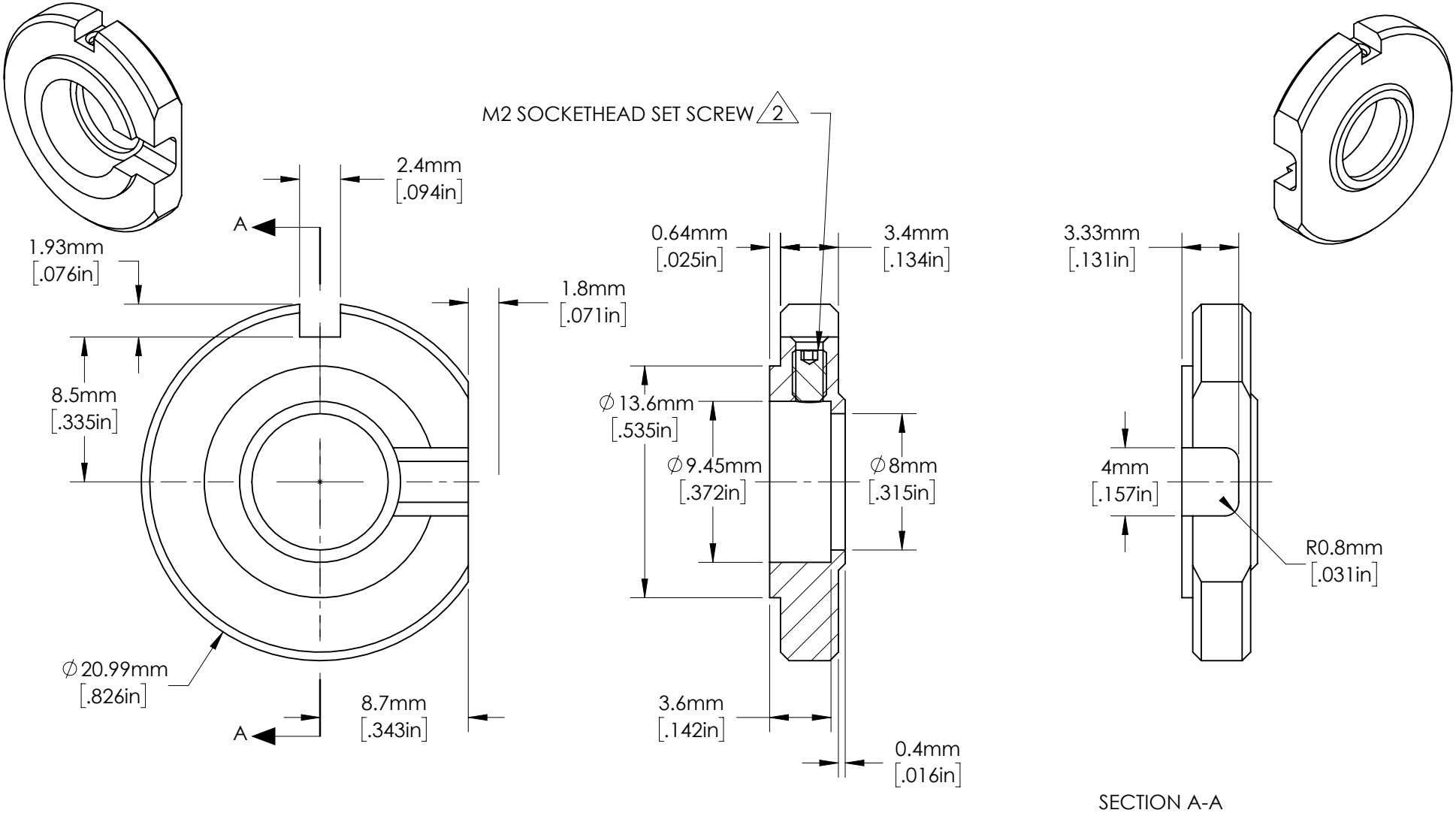

FOR INFORMATION ONLY:
DO NOT MANUFACTURE PARTS TO THIS DRAWING

SPECIFICATIONS SUBJECT TO CHANGE WITHOUT NOTICE
DIMENSIONS ARE FOR REFERENCE ONLY
DIMENSIONS ARE IN mm [INCHES]

NOTES:

1. LIQUID LENS SOLD SEPARATELY.
2. ALLEN KEY IS INCLUDED.

Edmund Optics®

TITLE	LIQUID LENS HOLDER FOR 12mm Cx LENS		
DWG NO	33631		SHEET 1 OF 1