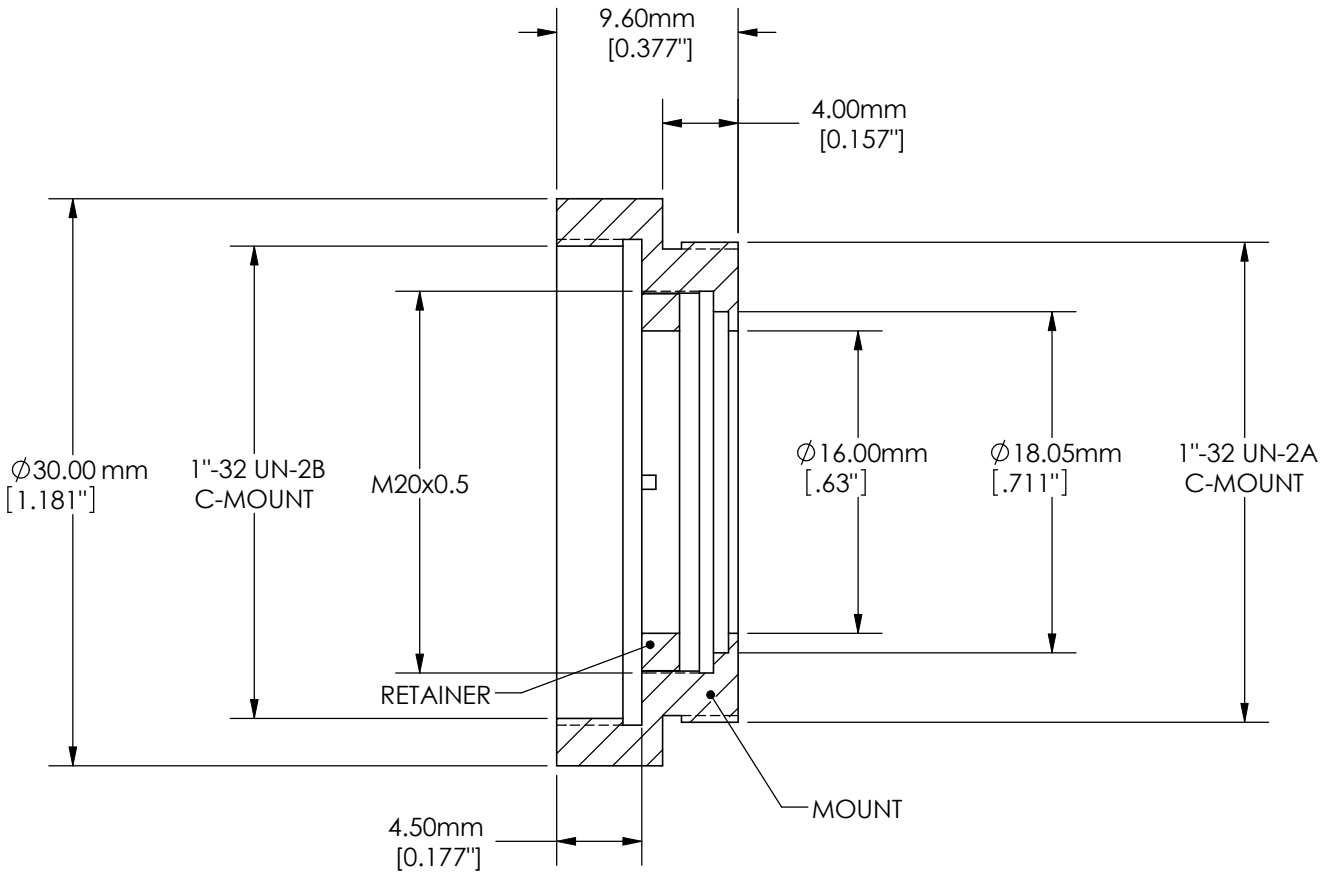

SPECIFICATIONS SUBJECT TO CHANGE WITHOUT NOTICE
DIMENSIONS ARE FOR REFERENCE ONLY

Edmund Optics®

TITLE	C-MOUNT 18mm DIA THIN LENS CELL MOUNT		
DWG NO	54617	REV	000