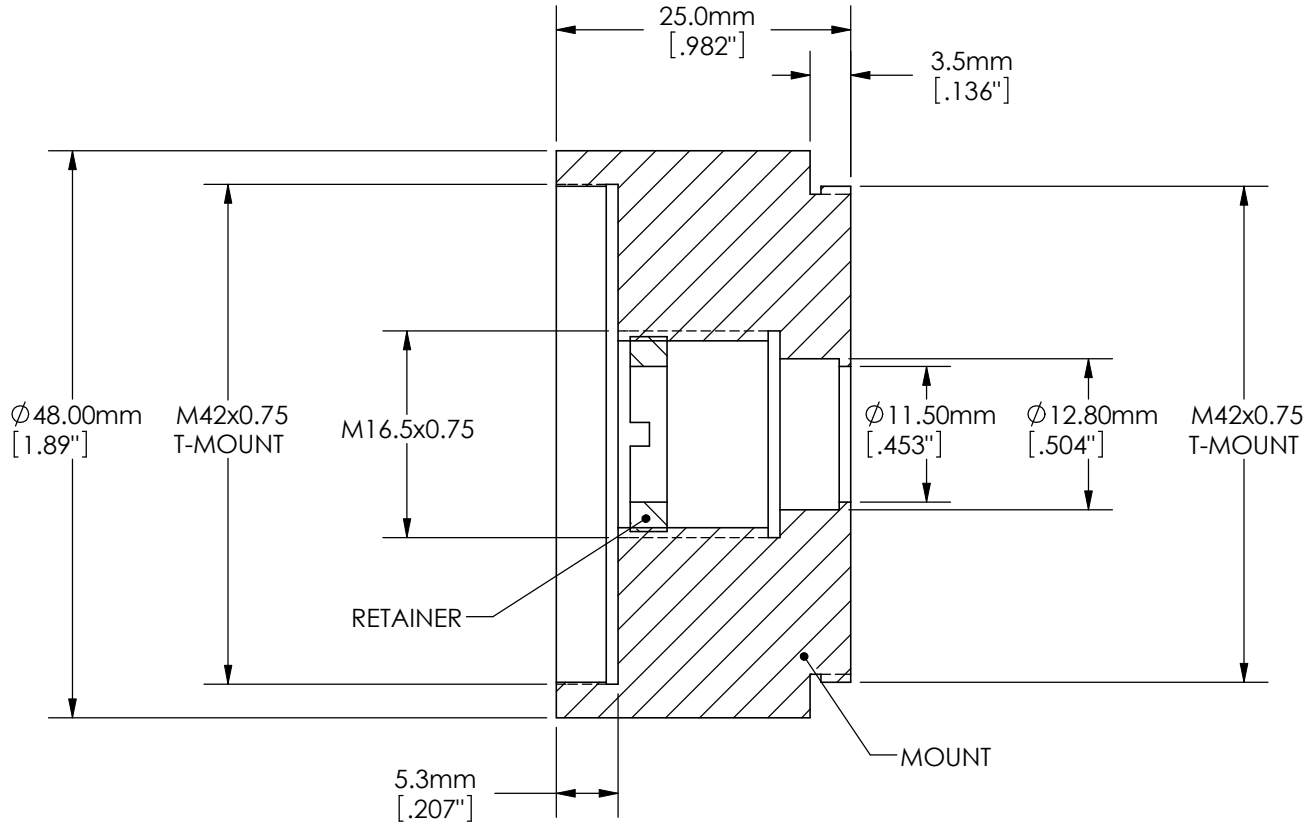

SPECIFICATIONS SUBJECT TO CHANGE WITHOUT NOTICE
DIMENSIONS ARE FOR REFERENCE ONLY

Edmund Optics®

TITLE	T-MOUNT 12.5mm THICK LENS MOUNT		
DWG NO	52954	REV	000